Models 250-S and 250-DW Relief Valves

Installation and Maintenance Instructions

PURPOSE

Safe practice in the transmission, distribution and utilization of gas requires a device to limit line pressure to a predetermined safe maximum, preventing overpressuring the system. Mechanical failure, accidents or foreign matter in the lines may render other types of safeguards inoperative and cause a dangerous overpressuring of the system.

Leaking bypass valves occasionally will permit pressure to build during off-peak hours. Pressure regulators with damaged valves or orifices are not able to effect a shutoff when required, thereby permitting a possibly dangerous overpressure condition.

The surest safeguard is a device that will open as necessary and discharge to atmosphere enough of the excess to maintain a safe pressure in the system.

The most beneficial and commonly used device is a mechanical relief valve, correctly installed at a safe dispersal point and set to discharge to atmosphere when line pressure exceeds a predetermined set-point.

Compact and easy to install, the relief valve offers an economical installation with large relieving capacity. It automatically closes when the pressure returns to normal. Many times, a small relief valve can be used advantageously with a larger relief valve. The smaller relief valve can be set for a lower discharge pressure to take care of minor pressure fluctuations without the necessity of venting a large amount of gas to atmosphere through the larger relief valve.

OPERATION

The operation of Sensus Safety Relief Valves is beneficial and simple. They are installed in a vertical line with the outlet usually connected to a rigid discharge stack with a suitable protective cap. A soft-seated valve is exposed to line pressure and, under normal conditions, is held tightly closed by the force exerted by the weight or spring. When line pressure increases sufficiently to overcome the closing force, the relief valve opens to discharge gas. The relief valve automatically closes after pressure returns to normal.

Installation and Start-Up

1. Thoroughly purge inlet piping to remove dirt and debris that could damage the relief valve or impair its operation.

   Make certain that the inside of the relief valve and piping are free of dirt, foreign matter and other debris.

2. Install the relief valve. Make certain flow through the relief valve is in the correct direction. High pressure connects to the inlet side. Be sure that shipping screens, pins or covers, if used, are removed.

   On flanges, tighten bolts evenly. On screwed connections, apply pipe dope to male threads only.

   The 250-DW must be mounted in an upright position due to the weights. The 250-S can be mounted upright or upside down; however, it cannot be mounted on its side due to the lack of valve guiding.

CAUTION

It is the user's responsibility to ensure that all regulator vents and/or vent lines exhaust to a non-hazardous location away from ANY POTENTIAL sources of ignition. Where vent lines are used, it is the user's responsibility to ensure that each regulator is individually vented and that common vent lines ARE NOT used.

3. The vent connection is an escape path for flammable gas and it must be located and/or piped so that potential discharge occurs in a safe area away from buildings, open flames, collection areas, arcing devices, etc.

   Relief valves that are installed indoors or in a non-vented area must be vented to the outside. Simply run vent piping from the vent and relief valve discharge connections to a nonhazardous location on the outside away from any potential sources of ignition. The vent piping must be connection size or larger and piped to a safe area.

   The outlet of the vent piping must allow for the free and unobstructed passage of air and gas and must be protected against the potentials listed in these instructions.

4. For outdoor installations, it is recommended that the relief valve be installed so the potential for water or other foreign matter entering the relief valve and interfering with the proper operation is avoided.

5. Check all connections for leaks.

CAUTION

Turn gas on very slowly. If an outlet stop valve is used, it should be opened first. Do not overload the diaphragm with a sudden surge of inlet pressure. Monitor the outlet pressure during start-up to prevent an outlet pressure overload.

6. Put the relief valve into operation by very slowly opening the upstream block valve **A** (see illustration on page 8).

7. Set adjusting screw **30** on 250-S for the required relief pressure. Turn it clockwise to increase the pressure and counterclockwise to decrease it. Only make this adjustment when gas is actually flowing through the relief valve. After adjustment is complete, locknut **31** should be tightened firmly.

8. On the 250-DW relief valve, remove clamp ring bolts **21**, cover **23** with cover cap **26**, remove shipping pin **27** and install the weights, thicker ones first, over stem **18c**.

9. To shut down 250-S, carefully close valve **A** (see illustration onpage 8). Break lock nut **31** loose. Turn adjustment screw **30** counterclockwise to depressurize.

10. To shut down 250-DW, remove clamp ring bolts **21**, cover **23**, with cover cap **26** and slowly remove weights or lift stem assembly **18** slightly to depressurize.

*This document replaces RM-1450B

SENSUS

CAUTION

Keep pipe dope and all other foreign substances out of the relief valve.

The vent must be positioned to protect against flooding, drain water, ice formation, traffic, tampering, etc. The vent must be protected against nest building animals, bees, insects, etc. to prevent vent blockage and minimize the chances for foreign material from to collect in the vent side of the diaphragm.

Servicing and Adjustment

General Notes

1. Make sure both the inlet and outlet chambers of the relief valve are entirely depressured before servicing.
2. Carefully note the location and position of disassembled parts to be certain reassembly is correct. Inspect each one carefully and replace those that are worn or damaged or otherwise unsatisfactory.
3. Use lubricants sparingly and with care to avoid exposing tacky surfaces to the gas stream. Such surfaces could cause dirt accumulation on close-clearance parts.

   Use moly or silicone type lubricants. Avoid the use of petroleum based types.

   An application of silicone based lubricant to the other O-rings and the tetraseals in the relief valve will also help ensure their tightness.

CAUTION

Relief valves are overpressure control devices with numerous moving parts subject to wear and are dependent upon particular operating conditions. To ensure continuous satisfactory operation, a periodic inspection schedule must be adhered to with the frequency of inspection determined by the severity of service and applicable laws and regulations.

To Change Spring on 250-S

1. To change spring **34**, close valve **A** (see illustration on page 8), release adjustment screw lock nut **31**, turn adjusting screw **30** counterclockwise slowly to depressurize, remove cover bolts **24**, cover **23** and upper spring ferrule **32**.
2. Remove spring **34** and install new spring. To install, reverse the procedure noted above.
3. Open valve **A** (see illustration on page 8). Set relief valve set-point. To increase, turn spring adjusting screw **30** clockwise, counterclockwise to decrease. Check for leakage and reseal. Tighten adjustment screw lock nut **31** firmly. Modify badge information.

To Service Diaphragm on 250-S

1. Complete step 1 of “To Change Spring on 250-S” and remove spring **34**, lower spring ferrule **32**, clamp ring bolts **21**, upper diaphragm ring **20**, including cover gasket **22**, and stop plate **33**. Also, on the 4" 250-S, weights **14** will be removed. Remove stem **18c**, diaphragm **8**, and stem assembly **18**, including the diaphragm gasket **9**, diaphragm **8**, upper diaphragm plate **10** and diaphragm plate bolts **7**.
2. Remove diaphragm plate bolts **7** from upper diaphragm plate **10**, remove diaphragm **8** and diaphragm gasket **9**. To install the new diaphragm and gasket, reverse the procedure noted above.
3. Open valve **A** (see illustration on page 8). Set relief valve set point. To increase, turn spring adjustment screw **30** clockwise or counterclockwise to decrease. Check for leakage and reseal. Tighten adjustment screw lock nut **31** firmly. Modify badge information.

To Service Valve on 250-S

1. Complete step 1 of “To Service Diaphragm on 250-S.” Remove valve wing **3**, remove valve disc **35**, clean valve holder **5**, and evenly apply new valve adhesive **36** and valve disc **35**. Reverse procedure.

To Change Weights on 250-DW

1. To change weights (12 through 17 per body size), close valve **A** (see illustration on page 8), remove cover bolts **24** and cover **23** with cover cap **26**.
2. Slowly remove weights (12 through 17 body per size) to depressurize and install new weights. Reverse procedure noted above.
3. Open valve **A** (see illustration on page 8). Set relief valve set-point. To increase, add weights, or remove weights to decrease. Check for leakage and reseal. The cover **23** with cover cap **26** should be in place during the setting of the relief valve. The cover bolts **24** should be assembled after setting the relief valve. Modify badge information.

To Service Diaphragm on 250-DW

1. Complete step 1 of “To Change Weights on 250-DW” and remove weights (12 through 17 body per size), clamp ring bolts **21** and upper diaphragm ring **20**, including cover gasket **22**. Remove stem **18c**, diaphragm **8**, and stem assembly **18**, including the diaphragm gasket **9**, upper diaphragm plate (10) or **11** and diaphragm plate bolts **7**.
2. Remove diaphragm plate bolts **7** from upper diaphragm plate **10** or **11**, remove diaphragm **8** and diaphragm gasket **9** and install new diaphragm and gasket. Reverse procedure noted above.
3. Open valve **A** (see illustration on page 8). Set relief valve set-point. To increase, turn spring adjustment screw clockwise or counterclockwise to decrease. Check for leakage and reseal. Lock adjustment screw nut. Modify badge information.

To Service Valve on 250-DW

1. Complete step 1 of “To Service Diaphragm on 250-DW.” Remove valve wing **3**, remove valve disc **6**, clean valve holder **5**, and evenly apply new valve adhesive **36** and valve disc. Reverse procedure.

CAUTION

The seating surface of the orifice, which is machined into the valve body (1 or 2) on the 250-S and 250-DW, should not be damaged during assembly. Valve wing 3 **should be carefully positioned into the valve body orifice prior to carefully positioning the stem** 18c**, diaphragm** 8 **and stem assembly** 18 **into place.**

Temperature Limits

Model 250-DW and 250-S Relief Valves can be used for flowing temperatures from -20°F to 150°F.

Buried Service

The 250-DW and 250-S Relief Valves are **not** recommended for buried service.

Model 250-S 2", 3", 4" Parts List

Illustration Number	Description	Part Number
4	Ball Bearing	930510
7	Diaphragm Plate Bolts	910001
19	Diaphragm Plate O-ring	934008
25	Vent Cap	137-02-505-03
28	Pipe Plug	906055
30	Adjusting Screw	115-16-007-50
31	Adjustment Screw Lock Nut	922233
32	Top and Bottom Spring Ferrule	115-16-009-50
34	Spring, Aluminum Spring, Green Spring, Yellow Spring, Gray Spring, Blue	090-70-021-00 090-70-021-01 090-70-021-02 090-70-021-03 090-70-021-04
36	Adhesive	905113

2" Model 250-S Parts List

Illustration Number	Description	Part Number
1	Body Screwed	115-16-001-50
2	Body Flanged	115-16-001-52
3	Valve Wing	115-16-012-54
5	Valve Holder	115-16-011-52
8	Diaphragm and Gasket Assembly*	115-16-350-50
9	Diaphragm Gasket	115-16-034-50
10	Upper Diaphragm Plate	115-16-010-50
18	Stem Assembly a. Lower Diaphragm Plate b. Diaphragm Plate Roll Pin c. Stem d. Gland e. Valve Roll Pin	115-16-316-51 115-16-022-50 901685 115-16-016-50 090-16-085-04 901686
20	Upper Diaphragm Ring	115-20-275-50
21	Clamp Ring Bolts	910028
22	Cover Gasket	115-16-066-50
23	Cover	115-16-006-50
24	Cover Bolts	910036
33	Stop Plate	115-16-040-50
34	Spring, Red	090-70-021-05
35	Valve Disc	115-16-017-20

*Always install with cloth side and gasket toward spring.

3" Model 250-S Parts List
3", 2½" Orifice

Illustration Number	Description	Part Number
2	Body Flanged Body Flanged for Units with 2½" Orifice	115-20-001-52 115-20-001-53
3	Valve Wing Valve Wing for Units with 2½" Orifice	115-20-012-54 115-20-012-56
5	Valve Valve for Units with 2½" Orifice	115-20-011-52 115-20-011-53
8	Diaphragm and Gasket Assembly*	115-16-350-50
9	Diaphragm Gasket	115-16-034-50
10	Upper Diaphragm Plate	115-16-010-50
18	Stem Assembly a. Lower Diaphragm Plate b. Diaphragm Plate Roll Pin c. Stem d. Gland e. Valve Roll Pin	115-20-316-51 115-16-022-50 901685 115-20-016-50 090-16-085-04 901686
21	Clamp Ring Bolts	910028
22	Cover Gasket	115-16-066-50
23	Cover	115-16-006-50
24	Cover Bolts	910036
29	Upper Diaphragm Ring	115-20-275-50
33	Stop Plate	115-16-040-50
34	Spring, Red	090-70-021-05
35	Valve Disc for Units with 3" Orifice	115-20-017-20

*Always install with cloth side and gasket toward spring.

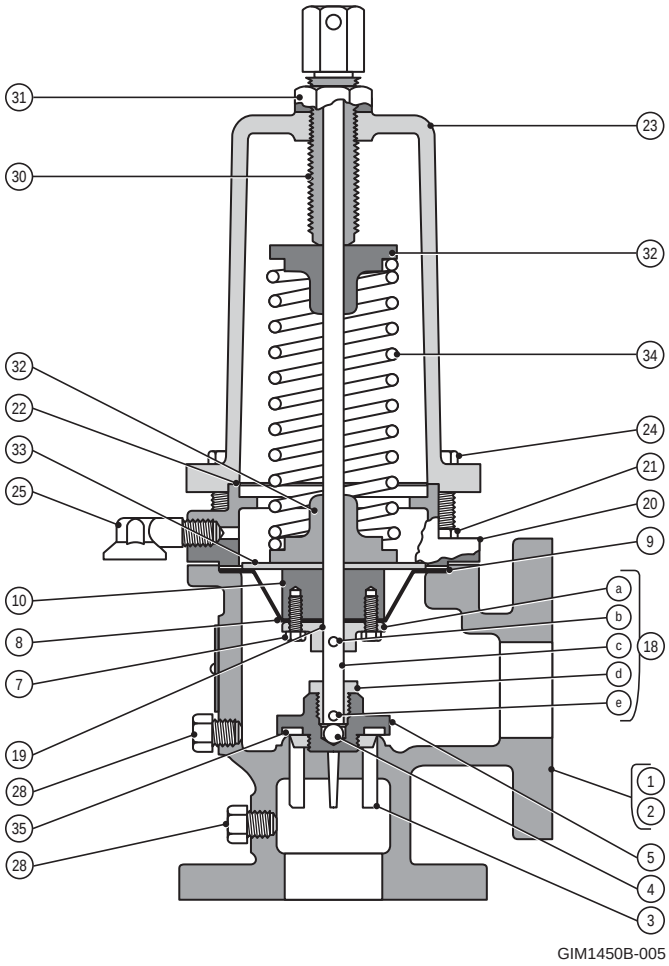

2" and 3" Model 250-S Relief Valve

4" Model 250-S Parts List
4", 3" Orifice

Illustration Number	Description	Part Number
2	Body Flanged Body Flanged for Units with 3" Orifice	115-22-001-52 115-22-001-53
3	Valve Wing Valve Wing for Units with 3" Orifice	115-22-012-51 115-20-012-54
5	Valve Holder Valve Holder for Units with 3" Orifice	115-22-011-51 115-20-011-52
8	Diaphragm and Gasket Assembly*	115-22-350-50
9	Diaphragm Gasket	115-22-034-50
10	Upper Diaphragm Plate	115-22-010-50
14	Weights	115-16-186-50
18	Stem Assembly a. Lower Diaphragm Plate b. Diaphragm Plate Roll Pin c. Stem d. Gland e. Valve Roll Pin	115-22-316-51 115-16-022-50 901685 115-22-016-50 090-16-085-04 901686
21	Clamp Ring Bolts	910055
22	Cover Gasket	115-22-066-50
23	Cover	115-22-006-50
24	Cover Bolts	910062
29	Upper Diaphragm Ring	115-22-275-50
33	Stop Plate	115-22-040-50
35	Valve Disc	115-22-017-20

*Always install with cloth side and gasket toward spring.

How to Order

When ordering parts, please specify the following:

1. **Part number**, **desciption** and **quantity** required of each part.
2. **Pipe size** and **model number** of the relief valve.
3. If available, the **serial number** of the relief valve should also be included.

Model 250-DW 2", 3", 4" Parts List

Illustration Number	Description	Part Number
4	Ball Bearing	930510
7	Diaphragm Plate Bolts	910001
12	Weights	115-16-184-50
13	Weights	115-16-185-50
19	Diaphragm Plate O-ring	934008
25	Vent Cap	137-02-505-03
28	Pipe Plug	906055
36	Adhesive	905113

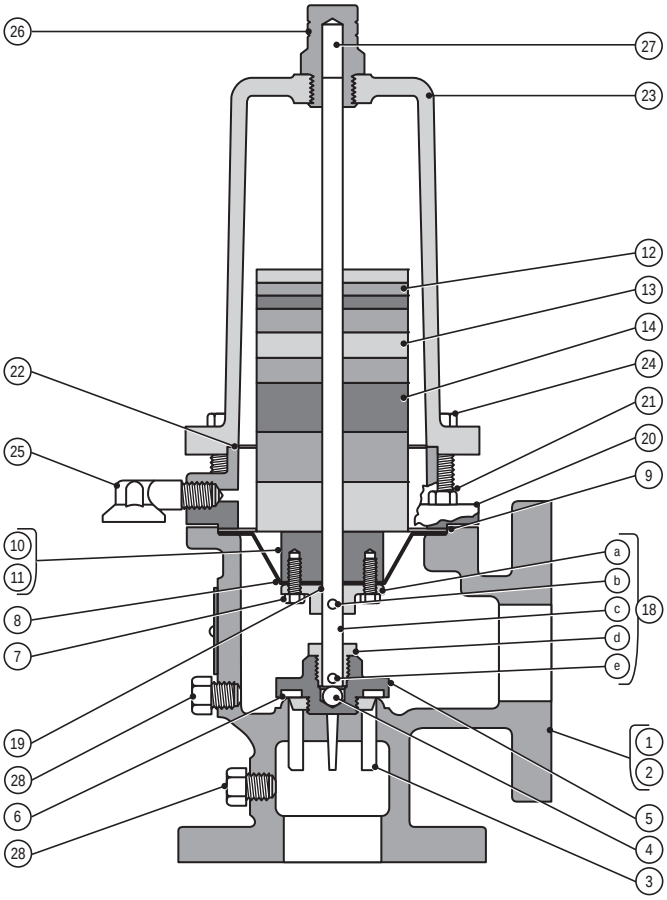

GIM1450B-010

2" and 3" Model 250-DW Relief Valve

2" Model 250-DW Parts List

Illustration Number	Description	Part Number
1	Body Screwed	115-16-001-50
2	Body Flanged	115-16-001-52
3	Valve Wing	115-16-012-54
5	Valve Holder	115-16-011-52
6	Valve Disc	115-16-017-30
8	Diaphragm and Gasket Assembly	115-16-350-50
9	Diaphragm Gasket	115-16-034-50
10	Upper Diaphragm Plate	115-16-010-50
11	Upper Diaphragm Plate 8 oz..	115-16-010-51
14	Weights	115-16-186-50
18	Stem Assembly a. Lower Diaphragm Plate b. Diaphragm Plate Roll Pin c. Stem d. Gland e. Valve Roll Pin	115-16-316-51 115-16-022-50 901685 115-16-016-50 090-16-085-04 901686
20	Upper Diaphragm Ring	115-16-275-51
21	Clamp Ring Bolts	910028
22	Cover Gasket	115-16-066-50
23	Cover	115-16-006-50
24	Cover Bolts	910036
26	Cover Cap	115-16-074-50
27	Shipping Pin	115-16-071-00

*Always install with cloth side and gasket toward spring.

3" Model 250-DW Parts List
3", 2½" Orifice

Illustration Number	Description	Part Number
2	Body Flanged Body Flanged for Units with 2½" Orifice	115-20-001-52 115-20-001-53
3	Valve Wing Valve Wing for Units with 2½" Orifice	115-20-012-54 115-20-012-56
5	Valve Valve for Units with 2½" Orifice	115-20-011-52 115-20-011-53
6	Valve Disc Valve Disc for Units with 2½" Orifice	115-20-017-30 115-20-017-31
8	Diaphragm and Gasket Assembly*	115-16-350-50
9	Diaphragm Gasket	115-16-034-50
10	Upper Diaphragm Plate	115-16-010-50
14	Weights	115-16-186-50
18	Stem Assembly a. Lower Diaphragm Plate b. Diaphragm Plate Roll Pin c. Stem d. Gland e. Valve Roll Pin	115-20-316-51 115-16-022-50 901685 115-20-016-50 090-16-085-04 901686
20	Upper Diaphragm Ring	115-16-275-51
21	Clamp Ring Bolts	910028
22	Cover Gasket	115-16-066-50
23	Cover	115-16-006-50
24	Cover Bolts	910036
26	Cover Cap	115-20-074-50
27	Shipping Pin	115-20-071-00

*Always install with cloth side and gasket toward spring.

4" Model 250-DW Parts List
4", 3" Orifice

Illustration Number	Description	Part Number
2	Body Flanged Body Flanged for Units with 3" Orifice	115-22-001-52 115-20-001-53
3	Valve Wing Valve Wing for Units with 3" Orifice	115-22-012-51 115-20-012-54
5	Valve Valve for Units with 3" Orifice	115-22-011-51 115-20-011-52
6	Valve Disc Valve Disc for Units with 3" Orifice	115-22-017-30 115-20-017-30
8	Diaphragm and Gasket Assembly*	115-22-350-50
9	Diaphragm Gasket	115-22-034-50
10	Upper Diaphragm Plate	115-22-010-50
15	Weights	115-22-184-50
16	Weights	115-22-185-50
17	Weights	115-22-186-50
18	Stem Assembly a. Lower Diaphragm Plate b. Diaphragm Plate Roll Pin c. Stem d. Gland e. Valve Roll Pin	115-22-316-51 115-16-022-50 901685 115-22-016-50 090-16-085-04 901686
20	Upper Diaphragm Ring	115-22-275-51
21	Clamp Ring Bolts	910055
22	Cover Gasket	115-22-066-50
23	Cover	115-22-006-50
24	Cover Bolts	910062
26	Cover Cap	115-22-074-50
27	Shipping Pin	115-22-071-00

*Always install with cloth side and gasket toward spring.

Other Gases

Model 250-DW and 250-S Relief Valves are mainly used on natural gas services; however, this relief valve will perform equally well on other gases. When using Model 250-DW and 250-S Relief Valves on other gases, the relief valve capacities must be adjusted using the following correction factors:

Type of Gas	Correction Factor
Air (Specific Gravity 1.0)	0.77
Propane (Specific Gravity 1.53)	0.63
1350 BTU Propane-Air Mix (Specific Gravity 1.20)	0.71
Nitrogen (Specific Gravity 0.97)	0.79
Dry Carbon Dioxide (Specific Gravity 1.52)	0.63

For other non-corrosive gases use the following formula:

$$\text{Correction Factor} = \sqrt{\frac{0.60}{\text{Specific gravity of the gas}}}$$

For use with gases not listed above, please contact your Sensus Representative or Industrial Distributor for recommendations.

Model 250-S
Relief Pressure Adjustment Range

Color of Spring	Relief Pressure Adjustment Range, psi			
	2"	3"	4"	
	1¾" dia.	3" dia.	4" dia.	3" dia.
Aluminum	2 - 10	1 - 4	1.00 - 2.25	
Green	10 - 16	4 - 6	2.25 - 3.50	
Yellow	16 - 26	6 - 10	3.50 - 5.50	
Gray	26 - 40	10 - 15	5.50 - 7.50	
Blue		15 - 30	7.50 -16.00	15 – 30

Model 250-S
Dimensions

Size	A	B	E	Weight
2" NPT	19½"	3¼"	3¼"	30
2" Flgd.	19½"	4¼"	4¼"	40
3"	20¾"	5"	5"	65
4"	22¼"	6"	6"	110

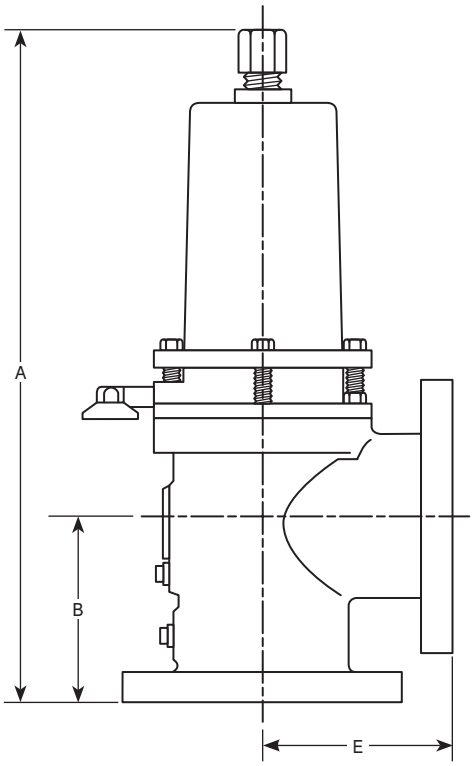

GIM1450B-015

Model 250-S
Relief Pressure Adjustment Range

Size	Valve Diameter	Relief Pressure Adjustment Range	Minimum Relief Pressure Without Weights	Adjustment Weights		Maximum Number of Weights
				Size	Will Increase Relief Pressure	
2"	1¾"	8 ounces to 6 ounces	15 ounces (8 ounces special)	3" x 1" 3" x ½" 3" x ¼"	12 ounces 6 ounces 3 ounces	7 – 1"
3"	3"	8 ounces to 36 ounces	8 ounces	3" x 1" 3" x ½" 3" x ¼"	4 ounces 2 ounces 1 ounces	7 – 1"
	2½"	11 ounces to 50 ounces	11 ounces	3" x 1" 3" x ½" 3" x ¼"	6 ounces 3 ounces 1.5 ounces	7 – 1"
4"	4"	8 ounces to 32 ounces	8 ounces	3" x ½" 3" x ¼"	1 ounce 0.5 ounces	Use these weights first, immediately above diaphragm
				3¾" x 1" 3¾" x ½" 3¾" x ¼"	4 ounces 2 ounces 1 ounces	6 – 1" x 3¾"
	3"	12 ounces to 55 ounces	12 ounces	3" x ½" 3" x ¼"	1 ounce	Use these weights first, immediately above diaphragm
				3¾" x 1" 3¾" x ½" 3¾" x ¼"	7 ounces 3.5 ounces 1.75 ounces	6 – 1" x 3¾"

Model 250-DW
Dimensions

Size	A	B	E	Weight
2" NPT	16¾"	3¼"	3¼"	30
2" Flgd.		4¼"	4¼"	40
3"	18¼"	5"	5"	65
4"	20"	6"	6"	110

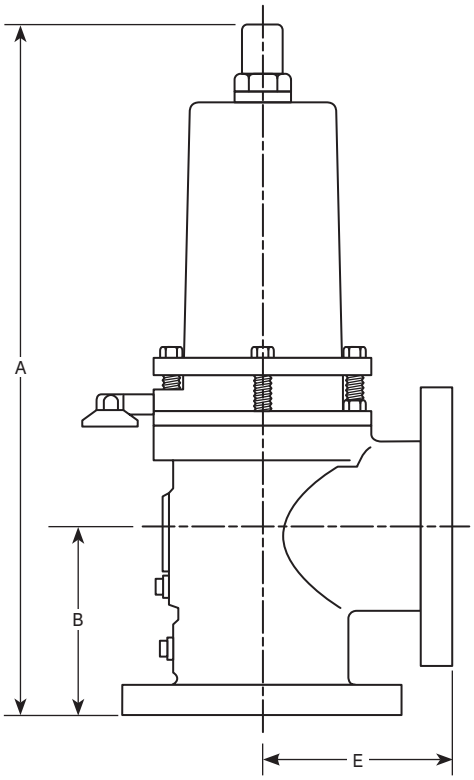

GIM1450B-020

Typical Arrangement and Dimensions
(Indoor or Outdoor Installation)

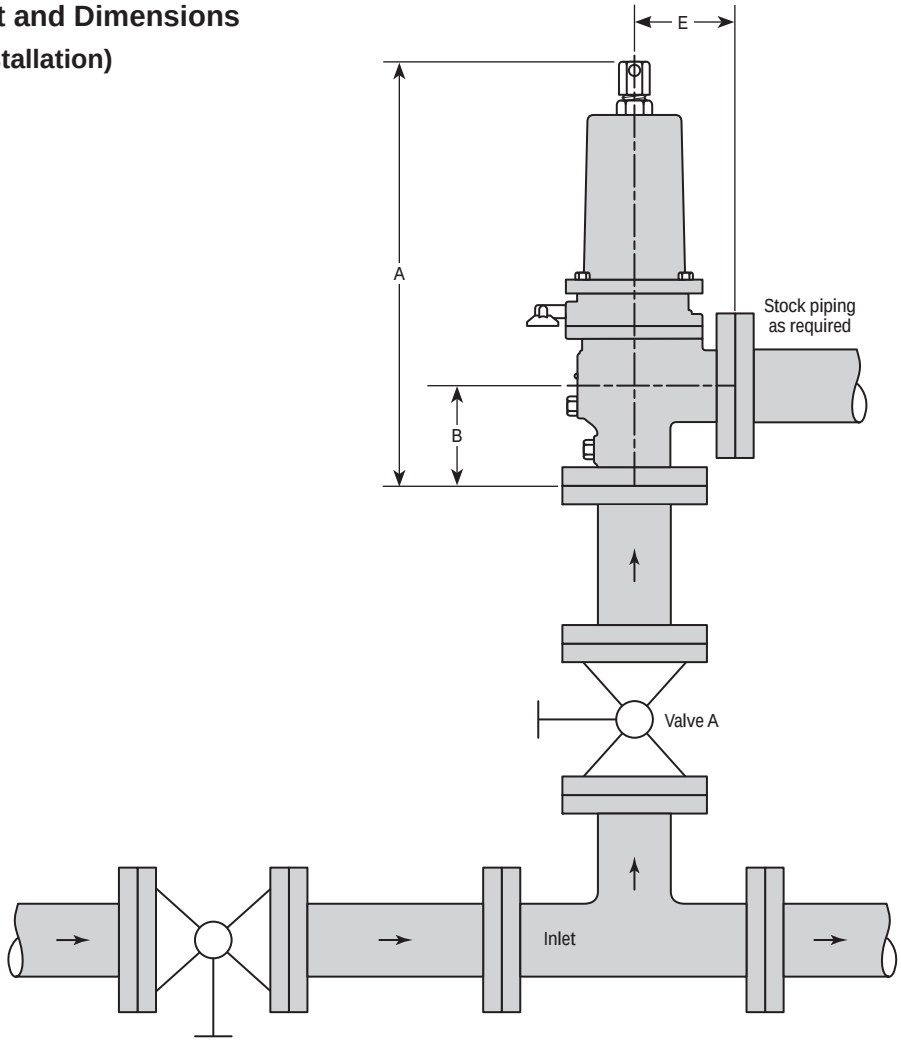

GIM1450B-025

Authorized Distributor:

All products purchased and services performed are subject to Sensus' terms of sale, available at either http://na.sensus.com/TC/TermsConditions.pdf or 1-800-METER-IT. Sensus reserves the right to modify these terms and conditions in its own discretion without notice to the customer.

This document is for informational purposes only, and SENSUS MAKES NO EXPRESS WARRANTIES IN THIS DOCUMENT. FURTHERMORE, THERE ARE NO IMPLIED WARRANTIES, INCLUDING WITHOUT LIMITATION, WARRANTIES AS TO FITNESS FOR A PARTICULAR PURPOSE AND MERCHANTABILITY. ANY USE OF THE PRODUCTS THAT IS NOT SPECIFICALLY PERMITTED HEREIN IS PROHIBITED. © 2013 Sensus.

805 Liberty Boulevard
DuBois, PA 15801
1-800-375-8875

For more information, visit us at sensus.com/gas